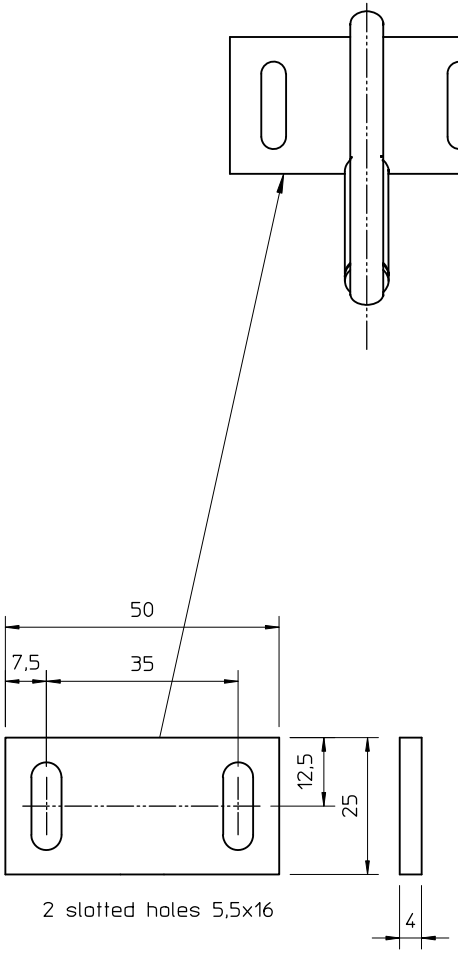

material: St37k strip 25x4

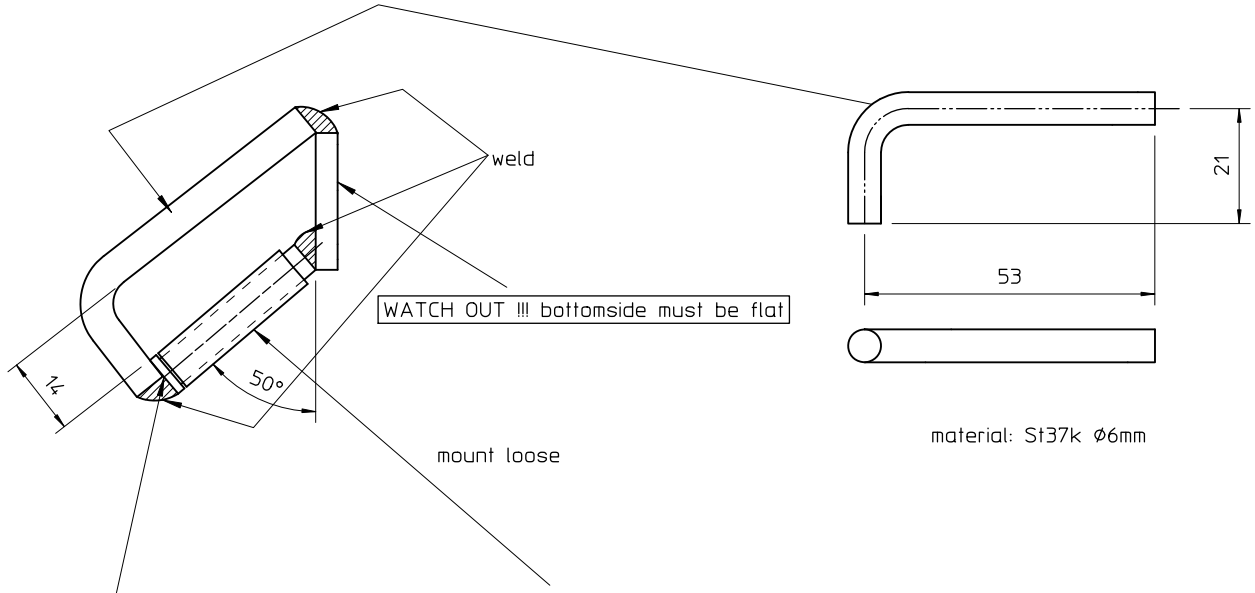

material: St37k ⌀6mm

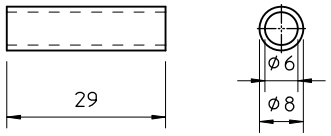

material: HRc 58

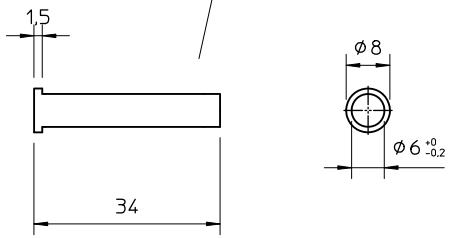

material: steel 9SMnPb28K ⌀8

			Tol. ±0,5 when not specified	Dimensions tolerances according to NEN-ISO 406	Geometric tolerances according to NEN-ISO 1101	projection
			Note:		Scale: 1 : 1	
					Name: R. de J.	
			Part.No. 20298700		Checked: B.A.	
					Date: 07-04-1998	
			Description: locking plate		Material	A3
No.	Modific. Date:	Modification:				

faber P.O.box 753,NL-8901 BN Leeuwarden Tel: +31(0)58-2849999 Fax: +31(0)58-2884441