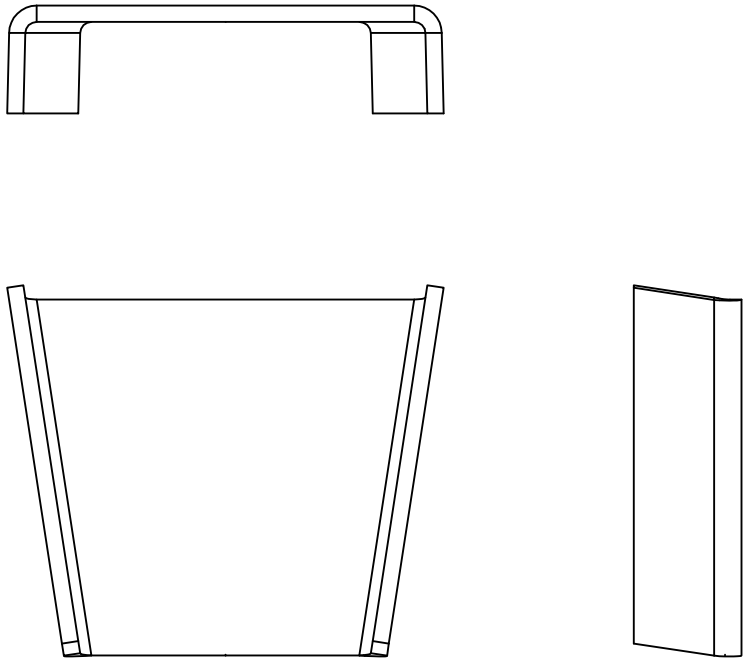

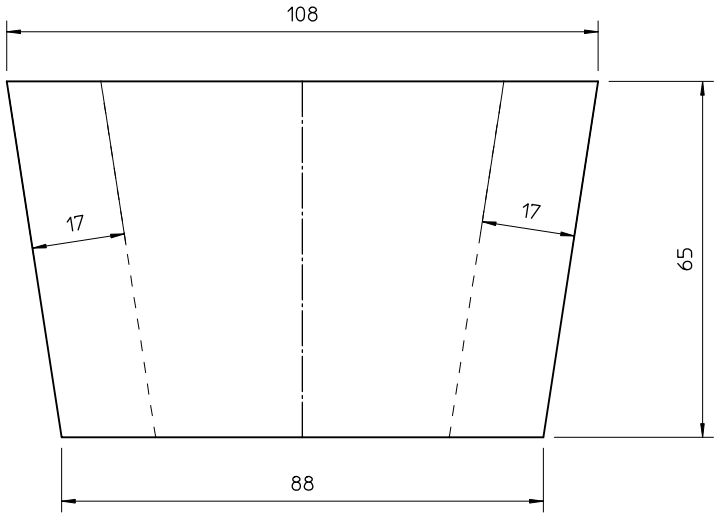

uitslag

			Tol. ±0.5 when not specified	Dimensions tolerances according to NEN-ISO 406	Geometric tolerances according to NEN-ISO 1101	projection
			Note:		Scale: 1 : 1	
					Name: W.K.	
			Part.No. 20264000/12		Checked:	
					Date: 14-08-2001	
			Description: POOTJE		Material PLAAT 3 mm	A3
No.	Modific. Date:	Modification:				

faber P.O.box 753,NL-8901 BN Leeuwarden Tel: +31(0)58-2849999 Fax: +31(0)58-2884441