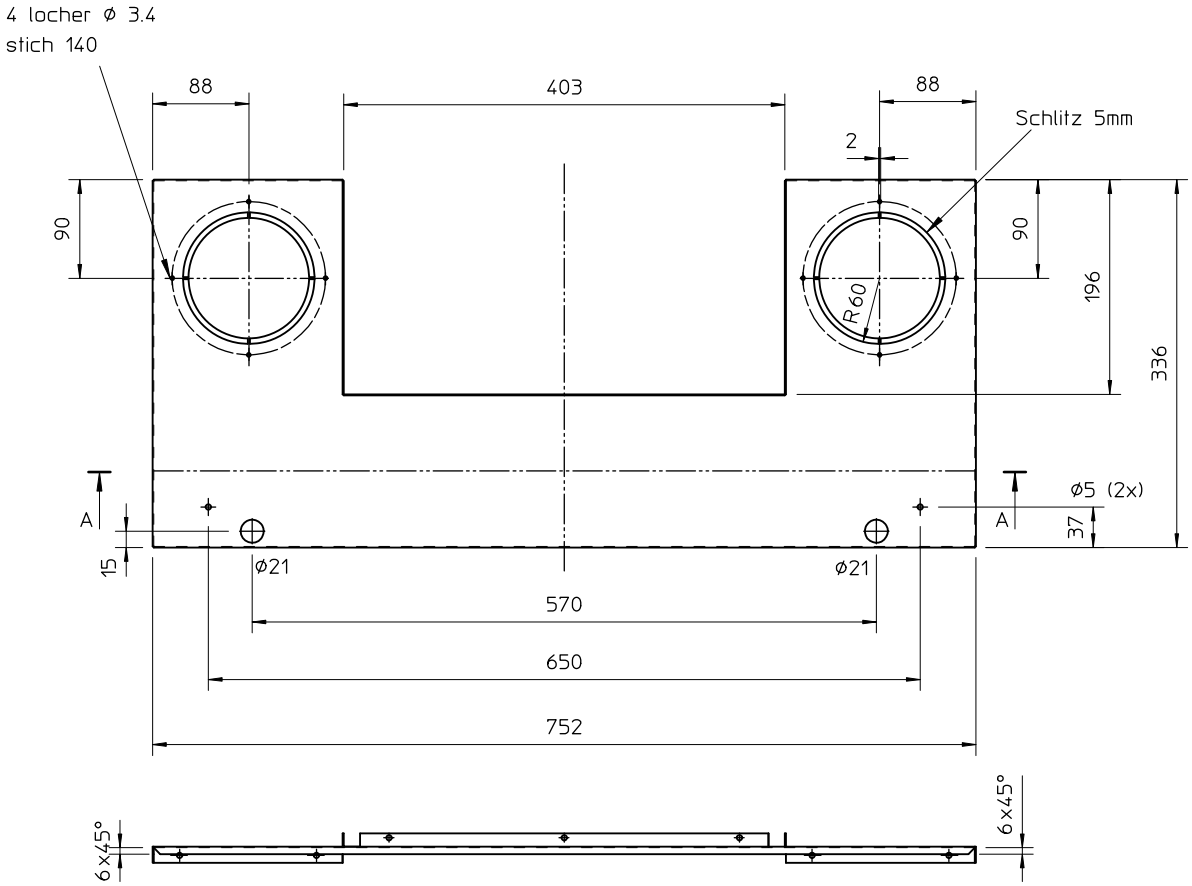

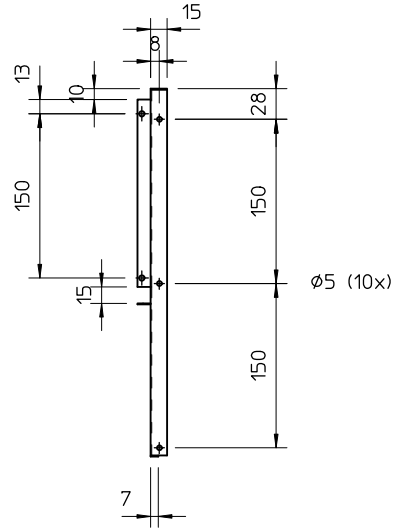

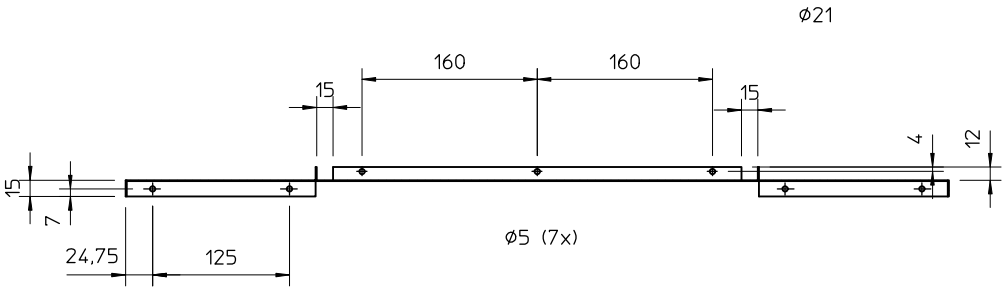

Durchschnitt A-A

			Tol. ±0,5 when not specified	Dimensions tolerances according to NEN-ISO 406	Geometric tolerances according to NEN-ISO 1101	projection
			Note:		Scale: 1 : 5	
					Name: R.de J.	
			Part.No.		Checked:	
B	23-10-2002		11600901		Date: 21-06-2002	
A	06-09-2002	Löcher 21mm	Description:		Material	
No.	Modific. Date:	Modification:	Obenplatte DC kast Spectra nova		aluminisiert stahl 1mm	A3

faber international P.O.box 219,NL-8440 AE Heerenveen Tel: +31(0)513-656500 Fax: +31(0)513-656531