Method I

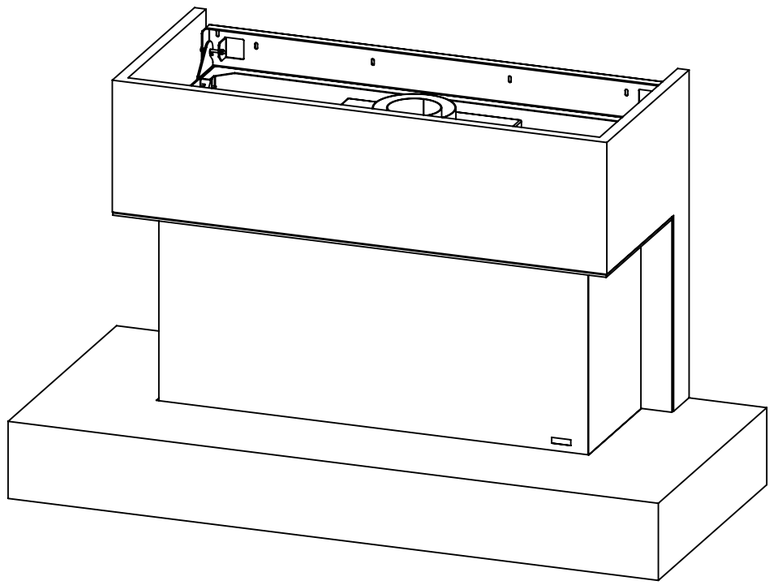

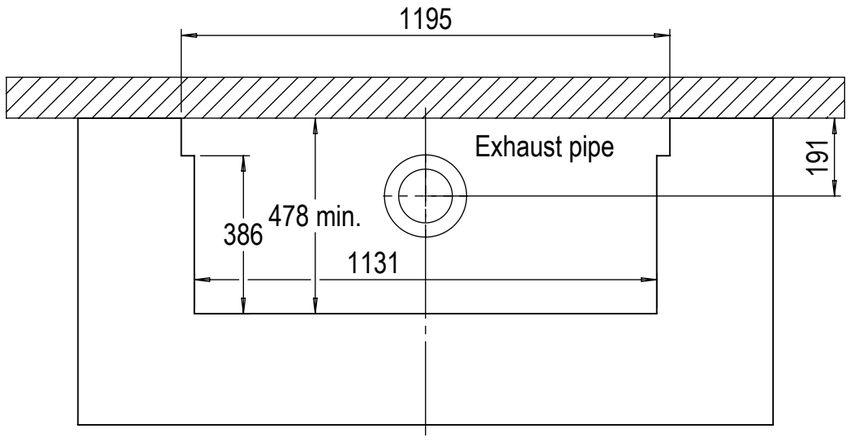

Method II

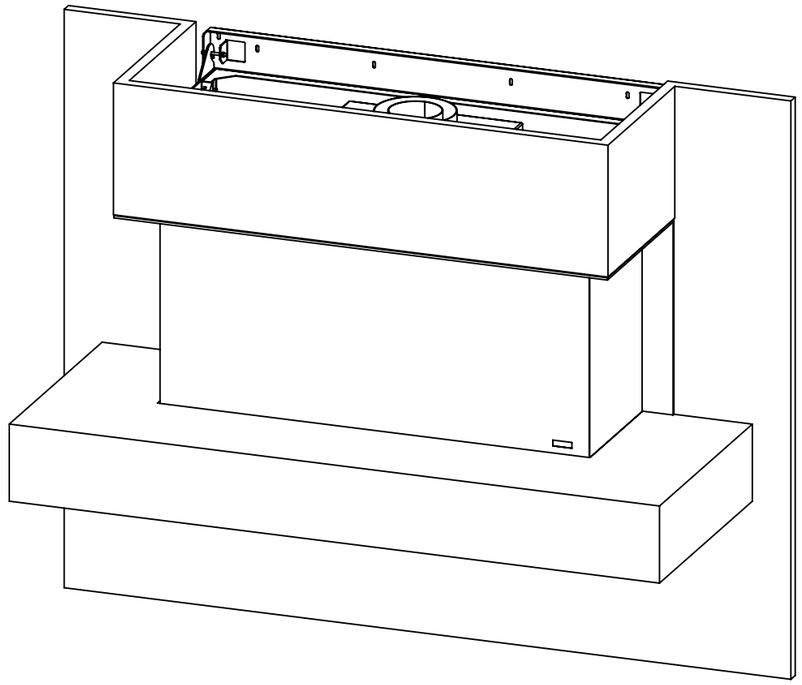

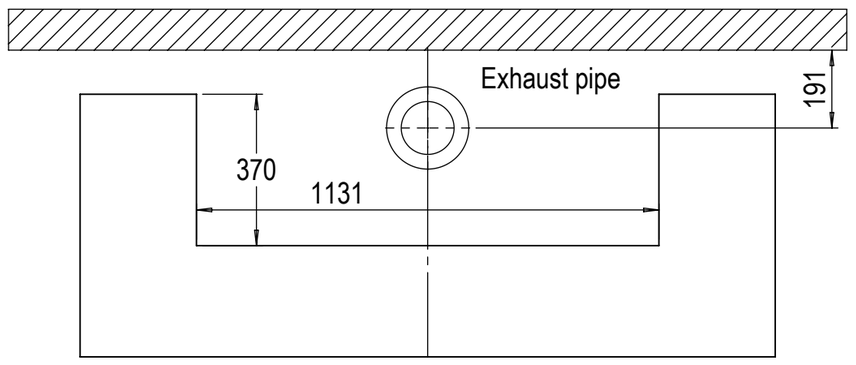

Dimensional drawing cutting size plateau MatriX 1050-III (from 01-10-2017)

Glen Dimplex Benelux **BV**
P.O.box 219, NL-8440 AE Heerenveen Tel.:+31(0)513 656500 Fax:+31(0)513 656531